USB to Serial

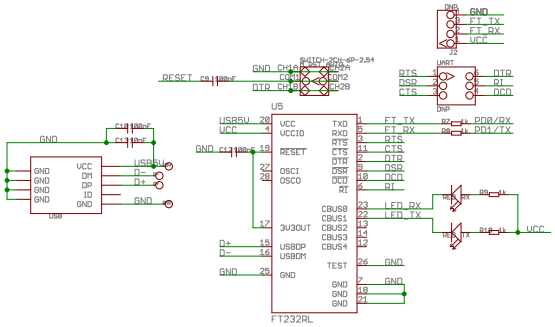

POWER

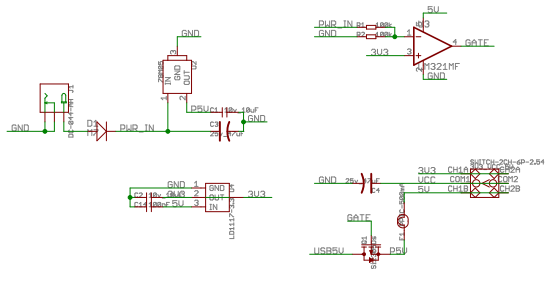

MICROCONTROLLER

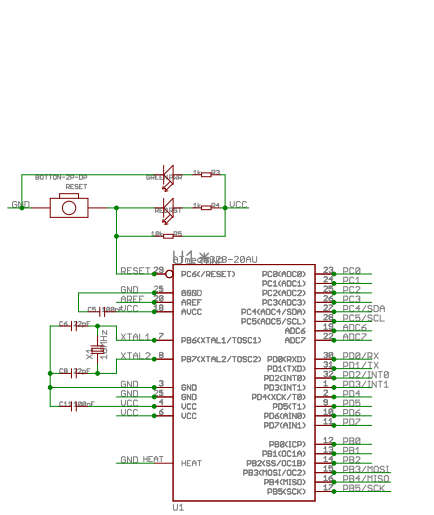

I/Os

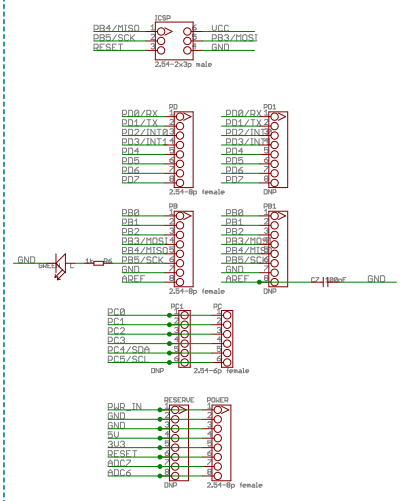
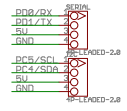
Grove